For SIEMENS RDG 260T controlled F4V convectors

Heating or cooling

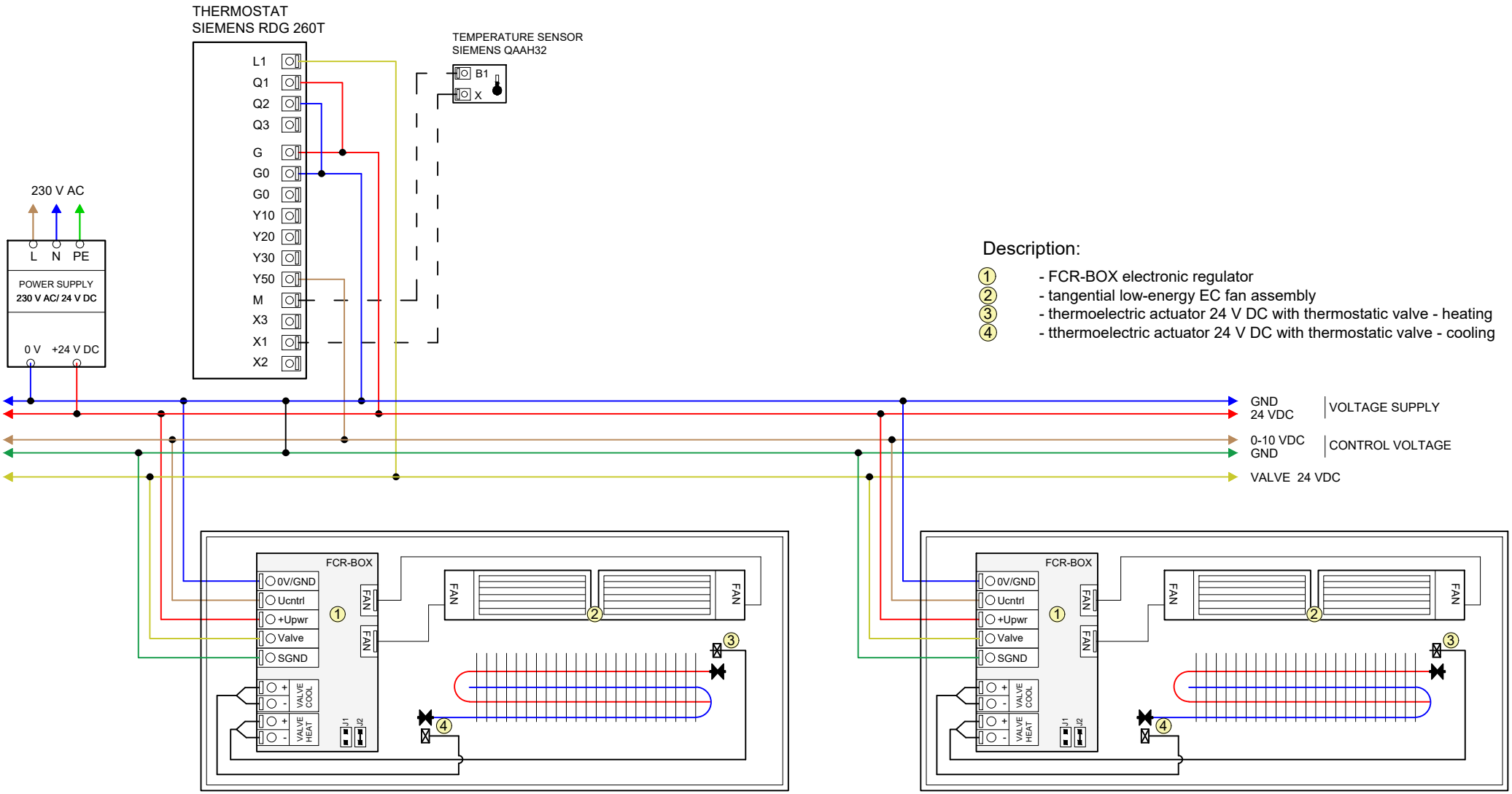

Description:

1. - FCR-BOX electronic regulator
2. - tangential low-energy EC fan assembly
3. - thermoelectric actuator 24 V DC with thermostatic valve - heating
4. - tthermoelectric actuator 24 V DC with thermostatic valve - cooling